45E3 (RN45) RAIL

RAIL DESIGNATION
45E3 (RN45)

RAIL ORIGIN
EUROPE

STANDARD
EN 13674 - 4

AREA OF SECTION
- mm2

CALCULATED MASS
44,79 kg/m

NEUTRAL AXIS TO BASE
68,4 mm

MOMENT OF INERTIA
XX - cm4 | YY - cm4

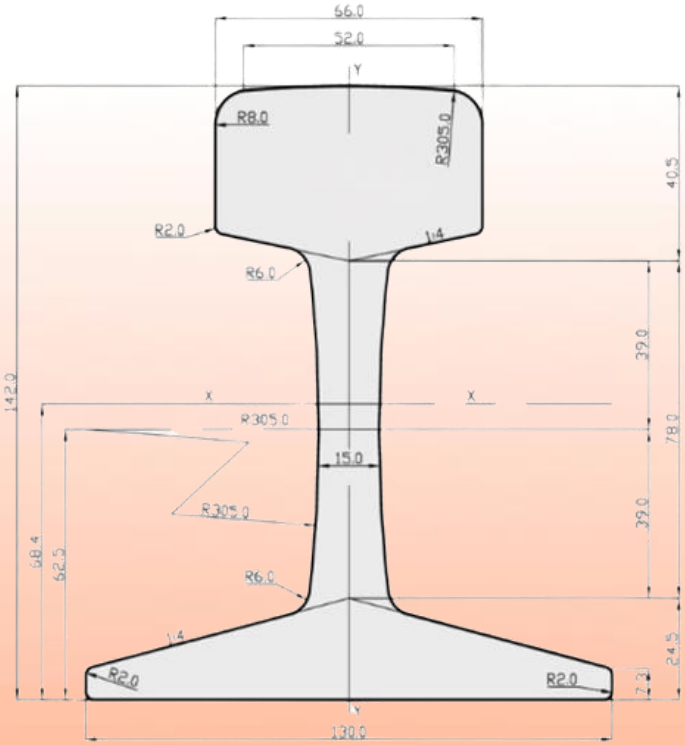

THIS DOCUMENT AND THE COPYRIGHT ARE OWNED BY BEMO RAIL BV - DEBBEMEERWEG 59 - 1749 DK WARMENHUIZEN - THE NETHERLANDS. IT MAY NEITHER BE COPIED NOR SUBMITTED TO THIRD PARTIES WITHOUT WRITTEN PERMISSION OF BEMO RAIL BV. CONTACT US FOR MORE INFORMATION +31(0)226 42 53 00