Weldable trolley rail clip
Y7b

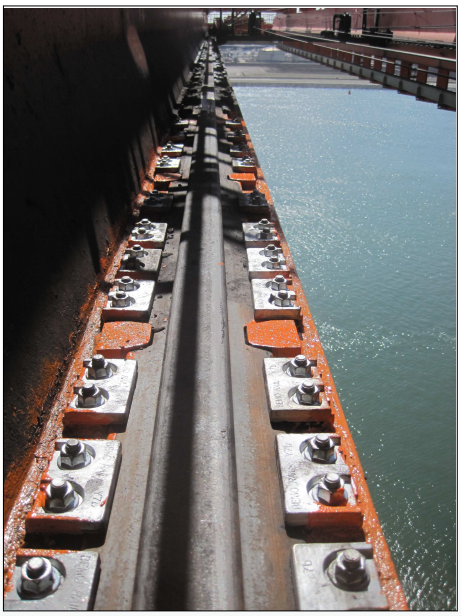

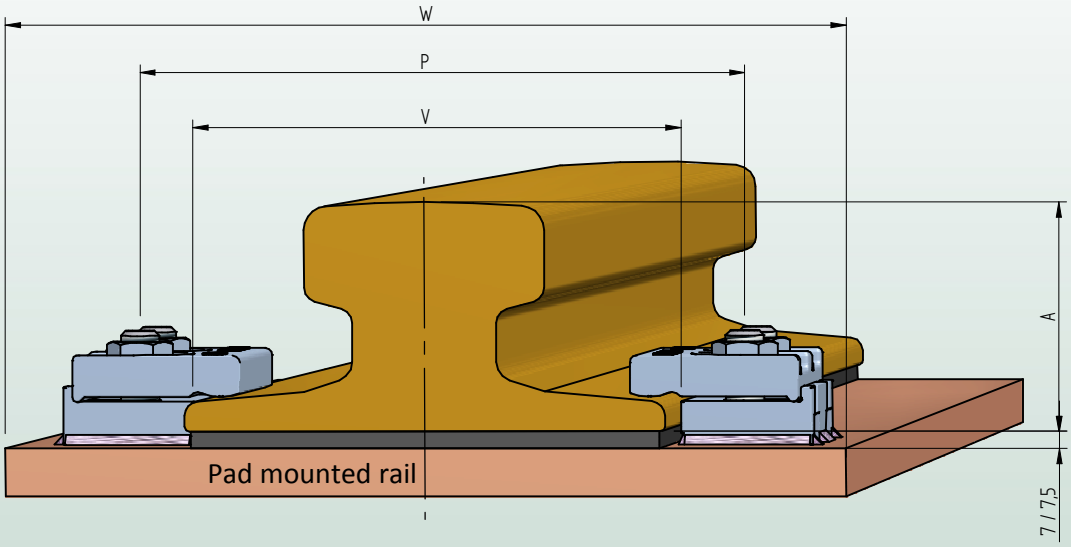

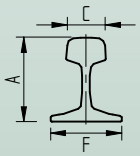	Inside distance between baseplates			V	Rail base + 4	[mm]
	Distance between bolts M16			P	Rail base + 54	[mm]
	Minimum width sole plate			W	Rail base + 130	[mm]
	F [mm]	**C** [mm]	**A** [mm]	**Pad mounted rail**		
A65	175	65	75	Y7b		
A75	200	75	85	Y7b		
A100	200	100	95	Y7b		

Specification	**Grade 8.8 Hex. bolt**	**Welding:**	The entire base Fillet welding ◺4	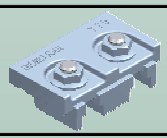
Maximum side load	130 kN	**Fixing bolts:**	Hexagon headscrew ISO4017 / DIN933 Steel grade 8.8 HDG	
Tightening torque	200 Nm			

BEMO RAIL

Debbemeerweg 59
1749 DK Warmenhuizen
The Netherlands

Tel.: +31 (0)226 425300
E-mail: info@bemorail.com
www.bemorail.com

Weldable trolley rail clip
Y7b

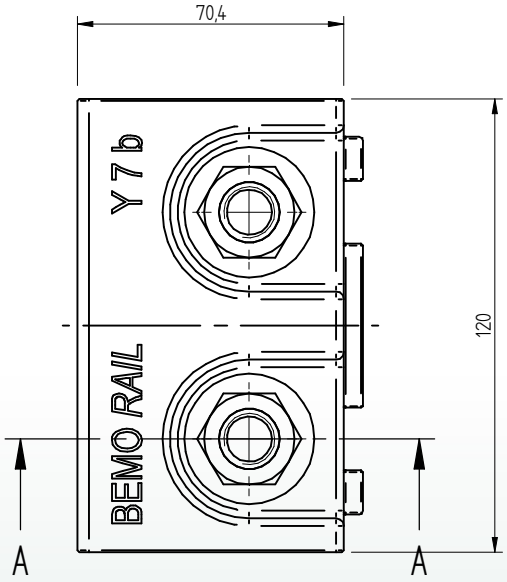

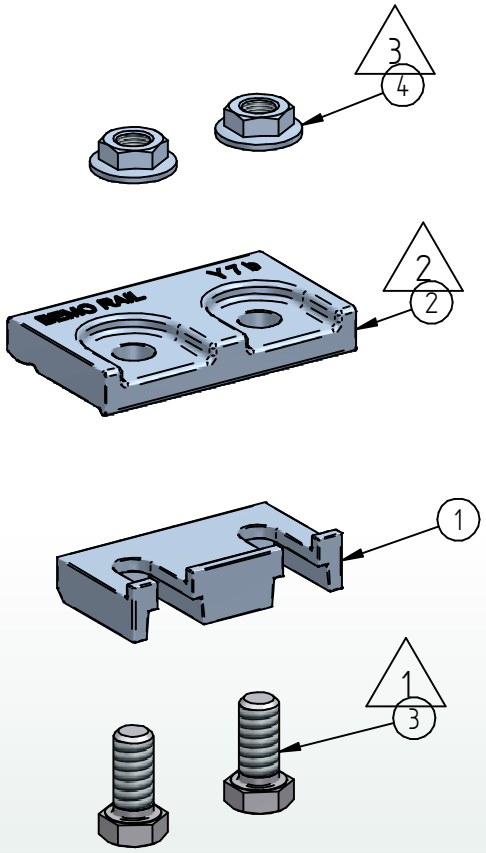

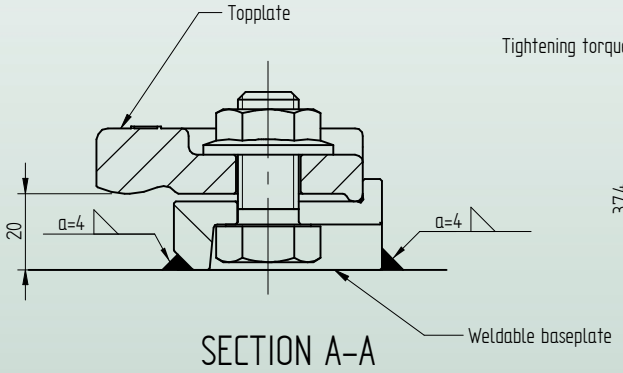

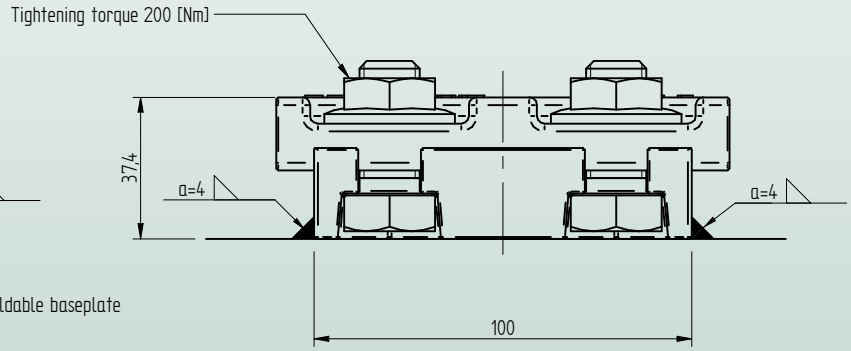

* Standard preservation is hot dip galvanized
Other preservation options in agreement

Item	Discription	Material	Type / Dimensions	Norm	Comments
4	Hexagon flange nut	Grade 8 H.D.G.	M16 ISO-metric	-	m = 0,044 [kg]
3	Hexagon head screw	8.8 HDG.	M16x35	DIN 933	m = 0,133 [kg]
2	Coverplate weldable railclip	S355J0*	Y7b		m = 0,906 [kg]
1	Baseplate weldable railclip	S355J2 self coloured	B7b		m = 0,522 [kg]

BEMO RAIL
Debbemeerweg 59
1749 DK Warmenhuizen
The Netherlands
Tel.: +31 (0)226 425300
E-mail: info@bemorail.com
www.bemorail.com